

datasheet

Photon laser diode Module + Modulation 405nm

Key features

- Visible light λ = 405nm
- Output powers from 0.9mW to 4mW
- Circular or elliptical output beam
- Modulation up to 1kHz
- Adjustable glass AR coated optics
- High reliability

Applications

- Imaging
- Spectroscopy
- Fluorescence sensing
- Microscopy
- Biomedical instrumentation

Options

PMM: Photon Module with Modulation
PMMF: Photon Module with Modulation & Flange

405nm Photon Laser Module + Modulation

The 405nm Photon Laser Modules produce either an elliptical output beam of 4 x 1.5mm ($1/e^2$) with output power of 4mW (PMM208-G), or a 2mm ($1/e^2$) circular output beam with output power of 0.9mW (PMM108-4).

Operating voltage is from 6.5V to 12V DC at an operating current of 90mA (PMM208-G), or 100mA (PMM108-4). Beam divergence is <0.6mrad (PMM108-4 circular) or 0.6x0.3mrad (PMM208-G elliptical).
Operating temperature range is -10°C to +50°C.

The modules consist of an aluminium housing, laser diode, drive circuit and collimating lens. The PMMF modules have a 25mm mounting flange.

Electrical connections are made via external flying leads. The lens may be adjusted to produce either a collimated beam or focused spot. The standard lens may be replaced by other optical systems such as line generators.

The Photon range of laser diode modules has been designed as a complete laser diode system for OEM use.

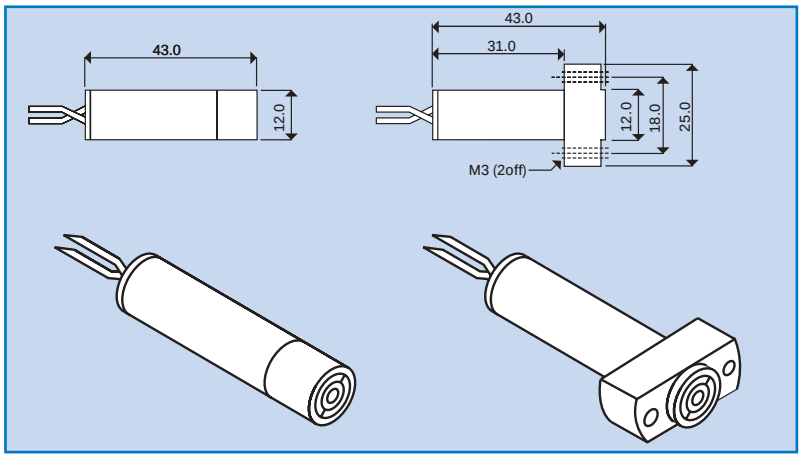

PHOTONIC PRODUCTS

the **Laser Diode** specialists

Photon laser diode Module + Modulation 405nm

datasheet

Specifications (typical @ tc = 25°C)

Part no. PMM/PMMF	108-4	208-G
Wavelength	405nm	405nm
Output Power	0.9mW	4.0mW
Power Stability	< 5%	
Beam Size (1/e²)	2mm circular	4x1.5mm elliptical
Beam Divergence	<0.6mrad	<0.6x0.3mrad
Pointing Stability	<0.2mrad/°C	
Bore Sighting	<2.0°	
Operating Voltage (DC)	6.5 - 12V	
Operating Current	100mA	90mA
Operating Temperature (non condensing)	-10°C to +50°C	
Storage Temperature	-40°C to +85°C	
Length	43mm	
Diameter (mounting flange 25mm)	12mm	
Housing Material	HE30 Anodised Aluminium	
Flying Lead Length	300mm	
Modulation (All PMM / PMMF modules have DC modulation capability)	TTL OHz-1kHz 0V=off, 5V=on	

Heat Sinking

If the case temperature of the laser diode exceeds its maximum specification, premature or catastrophic failure may occur. To ensure the maximum life of the laser diode, it is recommended that an additional electrically insulated heatsink, of at least 35 sq.cm. be used. Thermal transfer cream can be used to improve contact and heat dissipation. Do not restrict air circulation around the device.

Power Connections

The Photon laser diode modules require a regulated input voltage of 6.5-12V DC. Connections are made via the 2 pre-tinned external flying leads, (red is positive, black is negative). Modules with modulation have 3rd yellow wire.

WARNING: The anodised housing is internally connected to the positive supply rail. Damage to the external anodised surfaces will result in the housing being at positive potential.

Specifications subject to change without notice. E&OE

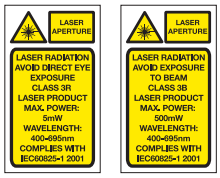

Laser Safety

The light emitted from these devices has been set in accordance with IEC60825. However, staring into the beam, whether directly or indirectly, must be avoided. IEC60825 classifies laser products into three different categories depending on light emitted, wavelength and eye safety.

CLASS II
"Caution", visible laser light less than 1.0mW. Considered eye safe, normal exposure to this type of beam will not cause permanent damage to the retina.

CLASS IIIR
"Danger", visible laser light between 1.0mW and 5.0mW. Considered eye safe with caution. Focusing of this light into the eye could cause some damage.

CLASS IIIB
"Danger", infrared (IR), and high power visible lasers considered dangerous to the retina if exposed.

NB: It is important to note that while complying with the above classifications, unless otherwise stated, our laser diode products are not certified and are designed solely for use in OEM products. The way in which the device is used in the final product may alter its original design classification, and it is the responsibility of the OEM to ensure compliance with the relevant standards.

PHOTONIC PRODUCTS UK LIMITED
Pierce Williams, Sparrow Lane
Hatfield Broad Oak, Hertfordshire CM22 7BA UK
Telephone: **+44 (0) 1279 717170**
Facsimile: **+44 (0) 1279 717171**
E-mail: **sales@photonic-products.com**
www.photonic-products.com

PHOTONIC PRODUCTS USA
Telephone: **+1 714-841-1960**
E-mail: **salesusa@photonic-products.com**
PHOTONIC PRODUCTS GERMANY
Telefon: **+49 (0) 8142 / 669 8364**
E-mail: **salesgermany@photonic-products.com**
www.photonic-products.com

PHOTONIC PRODUCTS

the **Laser Diode** specialists

Issue A: 01/05