RED LASER DIODE

DL-LS1060

Tentative

SANYO

Ver.2 Oct. 2001

Features

- wavelength : 658 nm (Typ.)
- High output power :90 mW at 70°C (pulse)
- Low threshold current : Ith = 35 mA (Typ.)
- Small package : ø5.6 mm
- TE mode

Applications

- DVD-R/RW

Package

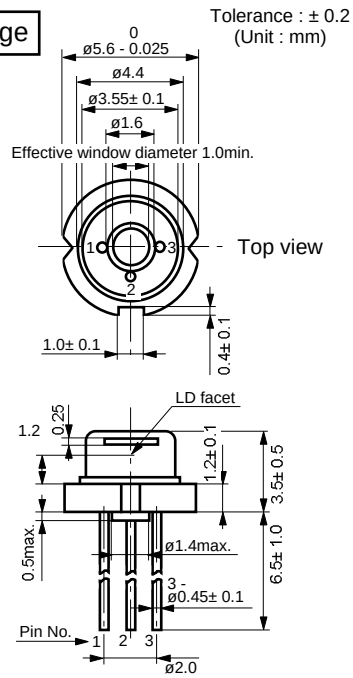

Pin Connection

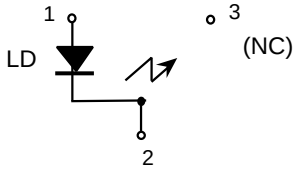

Absolute Maximum Ratings

(Tc=25°C)

Parameter		Symbol	Ratings	Unit
Light Output	CW	Po (CW)	50	mW
	Pulse 1)	Po(pulse)	90	
Reverse Voltage	Laser	VR	2	V
Operating Temperature		Topr	-10 to +70	°C
Storage Temperature		Tstg	-40 to +85	°C

1) Pulse Width 0.1µs, Duty 50%

Electrical and Optical Characteristics 2) 3)

(Tc=25°C)

Parameter		Symbol	Condition	Min.	Typ.	Max.	Unit
Threshold Current		Ith	CW	-	35	60	mA
Operating Current		Iop	Po=50mW	-	80	110	mA
Operating Voltage		Vop	Po=50mW	-	2.7	3.0	V
Lasing Wavelength		Lp	Po=50mW	-	658	664	nm
Beam Divergence 4)	Perpendicular	Qv	Po=50mW	15	17	20	°
	Parallel	Qh	Po=50mW	7	9.5	12	°
Off Axis Angle	Perpendicular	dQv	-	-	-	± 2	°
	Parallel	dQh	-	-	-	± 2	°
Differential Efficiency		dPo/dIop	-	-	1.1	-	mW/mA
Astigmatism		As	Po=50mW	-	1	-	µm

2) Initial values 3) All the above values are evaluated with Tottori Sanyo's measuring apparatus
4) Full angle at half maximum

Note : The above product specification are subject to change without notice.

Tottori SANYO Electric Co., Ltd. Electronic Device Business Headquarters
LED Division
5-318, Tachikawa, Tottori 680-8634 Japan TEL : +81-857-21-2137 FAX : +81-857-21-2161