670mW 500mW Laser Diode / Tentative

Description
The SLD1332V is a high power visible laser diode.
This laser diode has high brightness 500mW which can be achieved by QW structure.

Features
•High output power
  Recommended optical power output: Pop=500mW
•QW structure
•9mm Can-type Package

Application
•Measurement

Structure
•AlGaInP quantum well structure laser diode

Absolute Maximum Ratings(Tc=25℃)

•Optical power output	Pomax	0.55	W
•Reverse voltage	VR LD	2	V
	PD	15	V
•Operating temperature(Tc)	Topr	-10 to +30	℃
•Storage temperature	Tstg	-40 to +85	℃

Operating Lifetime
•MTTF 10,000H(effective value) at Po=0.5W,Tc=25℃

Warranty
This warranty period shall be 90 days after receipt of the product or 1,000 hours operation time whichever is shorter.
Sony Quality Assurance Department shall analyze any product that fails during said warranty period, and if the product shall be replaced free of charge.
Laser diodes naturally have differing lifetimes which follow a Weibull distribution.
Special warranties are also available.

Connection Diagram

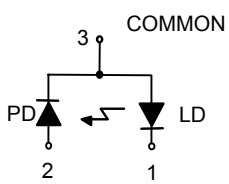

Pin configuration

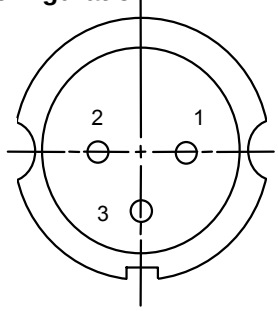

Bottom View

1. LD Cathode
2. PD Anode
3. COMMON

Electrical and Optical Characteristics (Tc:case temperature, Tc=25°C)

Item		Symbol	Conditions	Min.	Typ.	Max.	Unit
Threshold current		Ith		-	0.4	0.7	A
Operating current		Iop	Po=0.5W	-	0.8	1.2	A
Operating voltage		Vop	Po=0.5W	-	2.4	3.2	V
Wavelength		λp	Po=0.5W	660	670	680	nm
Radiation angle	Perpendicular	θ⊥	Po=0.5W	15	23	30	degree
	Parallel	θ//		4	8	15	degree
Positional accuracy	Position	ΔX, ΔY		-	-	±50	μm
	Angle	Δφ⊥	Po=0.5W	-	-	±3	degree
		Δφ//		-	-	±3	degree
Differential efficiency		ηD	Po=0.5W	-	1.0	-	W/A
Monitor current		Imon	Po=0.5W	-	0.7	-	mA

M-248 (LO-11)

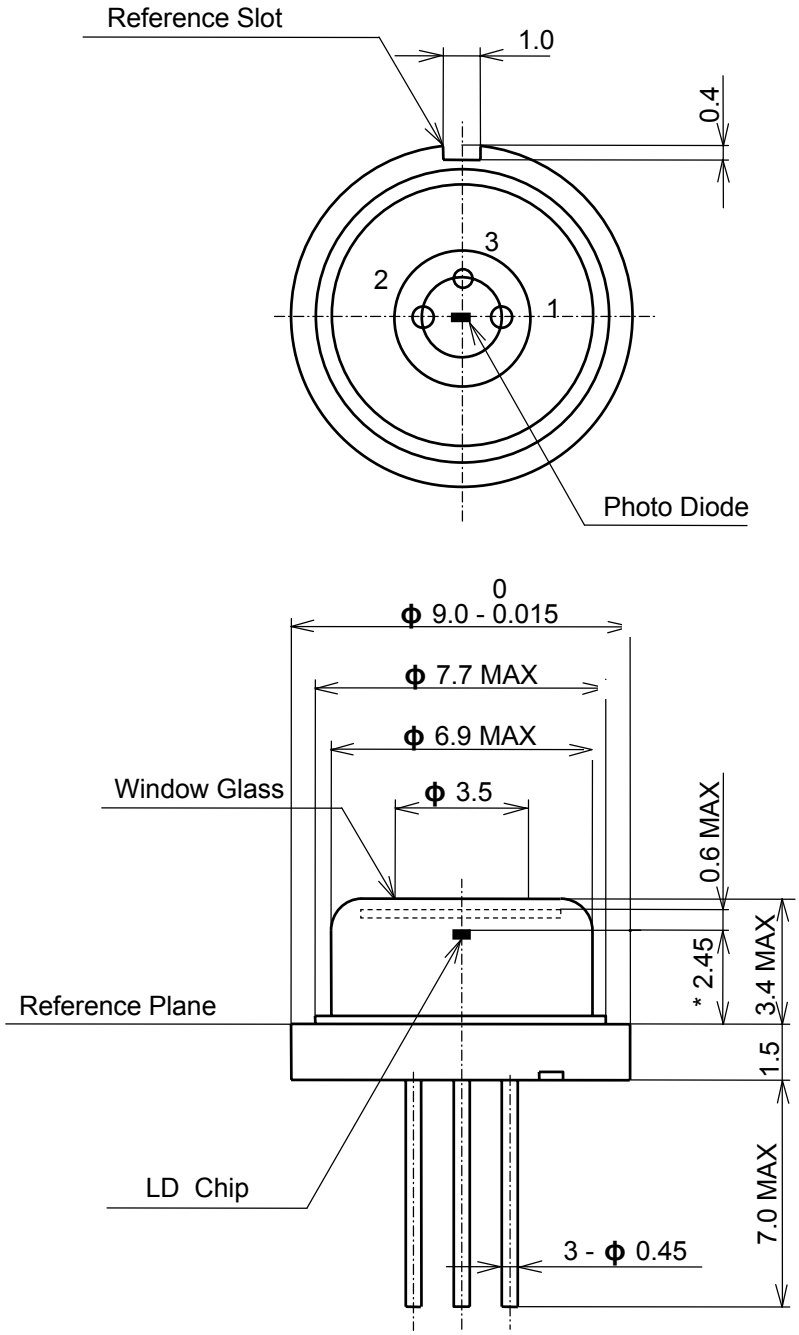

* Optical
Distance = 2.55 ± 0.05

PCD φ 2.54

SONY CODE	M-248
EIAJ CODE	———
JEDEC CODE	———

PACKAGE WEIGHT	1.2g