HL6335G/36G

Circular Beam Low Operating Current

HITACHI

ADE-208-1419A (Z)

Rev.1
Jul. 2001

Description

The HL6335/36G are 0.63 μm band AlGaInP laser diodes can be operated with low operating current. It provides circular beam by its unigue active layer structure. It is suitable as a light source for laser levelers, laser scanners and optical equipment for measurement.

Application

- Laser leveler
- Laser scanner
- Measurement

Features

- Optical output power : 5 mW CW
- Low operating current : 25 mA Typ
- Low aspect ratio : 1.2 Typ (almost circular beam)
- Operating temperature : +50°C

Package Type
• HL6335/36G: G2

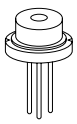

Internal Circuit
• HL6335G

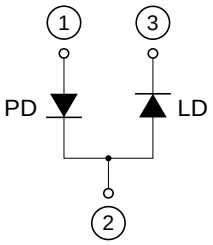

Internal Circuit
• HL6336G

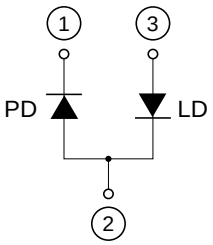

Hitachi semiconductor

Absolute Maximum Ratings

(T_C = 25°C)

Item	Symbol	Value	Unit
Optical output power	P_O	5	mW
Pulse optical output power	$P_{O(Pulse)}$	6 *	MW
LD reverse voltage	$V_{R(LD)}$	2	V
PD reverse voltage	$V_{R(PD)}$	30	V
Operating temperature	Topr	–10 to +50	°C
Storage temperature	Tstg	–40 to +85	°C

Note: Pulse condition : Pulse width ≤ 1 μs, duty = 50%

Optical and Electrical Characteristics

(T_C = 25°C)

Item	Symbol	Min	Typ	Max	Unit	Test Condition
Optical output power	P_O	5	—	—	mW	Kink free
Threshold current	Ith	—	20	40	mA	
Slope efficiency	ηs	—	1.0	—	mW/mA	3 (mW) / ($I_{(4mW)}$ – $I_{(1mW)}$)
Operating current	I_{OP}	—	25	60	mA	P_O = 5 mW
Operating voltage	V_{OP}	—	2.4	2.7	V	P_O = 5 mW
Lasing wavelength	λp	630	635	640	nm	P_O = 5 mW
Beam divergence parallel to the junction	θ//	—	17	—	deg.	P_O = 5 mW
Beam divergence parpendicular to the junction	θ⊥	—	20	—	deg.	P_O = 5 mW
Aspect ratio	θ⊥/θ//	—	1.2	1.5	—	P_O = 5 mW
Monitor current	I_S	—	0.1	—	mA	P_O = 5 mW, $V_{R(PD)}$ = 5 V

Notes:
1. Care must be taken in laser diodes handling to prevent optical damage caused by forward surges as well as by ESD.
2. The wavefront performance is not guaranteed.
3. The beam has 12 deg offset against the package reference plane. Please take account it mounted on a board.

Package Dimensions

Unit: mm

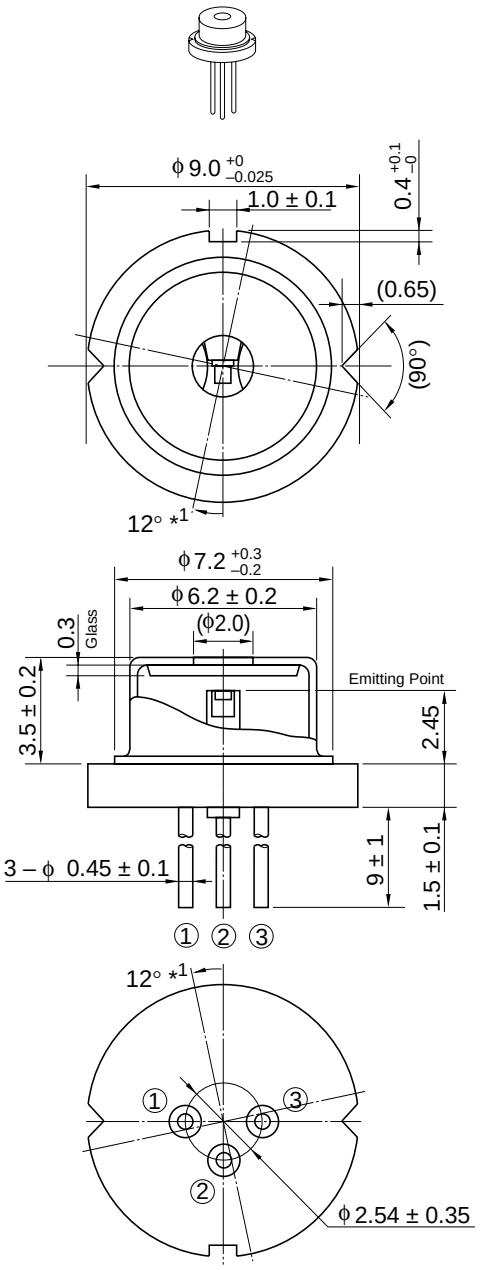

Note: 1. The beam has 12 deg offset against the package reference plane.
Please take account it mounted on a board.

Hitachi Code	LD/G2
JEDEC	—
EIAJ	—
Mass (reference value)	1.1 g

Disclaimer

1. Hitachi neither warrants nor grants licenses of any rights of Hitachi's or any third party's patent, copyright, trademark, or other intellectual property rights for information contained in this document. Hitachi bears no responsibility for problems that may arise with third party's rights, including intellectual property rights, in connection with use of the information contained in this document.
2. Products and product specifications may be subject to change without notice. Confirm that you have received the latest product standards or specifications before final design, purchase or use.
3. Hitachi makes every attempt to ensure that its products are of high quality and reliability. However, contact Hitachi's sales office before using the product in an application that demands especially high quality and reliability or where its failure or malfunction may directly threaten human life or cause risk of bodily injury, such as aerospace, aeronautics, nuclear power, combustion control, transportation, traffic, safety equipment or medical equipment for life support.
4. Design your application so that the product is used within the ranges guaranteed by Hitachi particularly for maximum rating, operating supply voltage range, heat radiation characteristics, installation conditions and other characteristics. Hitachi bears no responsibility for failure or damage when used beyond the guaranteed ranges. Even within the guaranteed ranges, consider normally foreseeable failure rates or failure modes in semiconductor devices and employ systemic measures such as fail-safes, so that the equipment incorporating Hitachi product does not cause bodily injury, fire or other consequential damage due to operation of the Hitachi product.
5. This product is not designed to be radiation resistant.
6. No one is permitted to reproduce or duplicate, in any form, the whole or part of this document without written approval from Hitachi.
7. Contact Hitachi's sales office for any questions regarding this document or Hitachi semiconductor products.

1. The laser light is harmful to human body especially to eye no matter what directly or indirectly. The laser beam shall be observed or adjusted through infrared camera or equivalent.

Sales Offices

HITACHI

Hitachi, Ltd.
Semiconductor & Integrated Circuits
Nippon Bldg., 2-6-2, Ohte-machi, Chiyoda-ku, Tokyo 100-0004, Japan
Tel: (03) 3270-2111 Fax: (03) 3270-5109

URL NorthAmerica : http://semiconductor.hitachi.com/
Europe : http://www.hitachi-eu.com/hel/ecg
Asia : http://sicapac.hitachi-asia.com
Japan : http://www.hitachi.co.jp/Sicd/indx.htm

For further information write to:

Hitachi Semiconductor
(America) Inc.
179 East Tasman Drive
San Jose,CA 95134
Tel: <1> (408) 433-1990
Fax: <1>(408) 433-0223

Hitachi Europe Ltd.
Electronic Components Group
Whitebrook Park
Lower Cookham Road
Maidenhead
Berkshire SL6 8YA, United Kingdom
Tel: <44> (1628) 585000
Fax: <44> (1628) 585200

Hitachi Europe GmbH
Electronic Components Group
Dornacher Straße 3
D-85622 Feldkirchen, Munich
Germany
Tel: <49> (89) 9 9180-0
Fax: <49> (89) 9 29 30 00

Hitachi Asia Ltd.
Hitachi Tower
16 Collyer Quay #20-00
Singapore 049318
Tel : <65>-538-6533/538-8577
Fax : <65>-538-6933/538-3877
URL : http://www.hitachi.com.sg

Hitachi Asia Ltd.
(Taipei Branch Office)
4/F, No. 167, Tun Hwa North Road
Hung-Kuo Building
Taipei (105), Taiwan
Tel : <886>-(2)-2718-3666
Fax : <886>-(2)-2718-8180
Telex : 23222 HAS-TP
URL : http://www.hitachi.com.tw

Hitachi Asia (Hong Kong) Ltd.
Group III (Electronic Components)
7/F., North Tower
World Finance Centre,
Harbour City, Canton Road
Tsim Sha Tsui, Kowloon
Hong Kong
Tel : <852>-(2)-735-9218
Fax : <852>-(2)-730-0281
URL : http://semiconductor.hitachi.com.hk

Copyright © Hitachi, Ltd., 2001. All rights reserved. Printed in Japan.

Colophon 4.0